CHAPTER 28

Electrostatics

28.1 Charges

We shall start this topic by revising and extending our knowledge of atoms and molecules.

Ancient Greek philosophers believed that matter was composed of tiny particles or atoms. In 1808, John Dalton, an English chemist, produced evidence indicating that matter consists of atoms or molecules (groups of atoms).

An atom ***is the smallest particle of matter that can take part in a chemical change***. Atoms are neutral particles but they are made up of smaller particles some of which are not neutral. The non-neutral particles are called **electric charges**.

The subject of electric charges at rest is referred to as **electrostatics** or **static electricity**. Experiments show that **there are two kinds of charge**. The fundamental charges are particles called **electrons** and **protons**; *they are arbitrarily considered to be negative and positive respectively*. The *magnitude* of the charge on an electron is equal to the charge on a proton. Since atoms are neutral particles, the number of electrons in an atom is equal to the number of protons.

At the beginning of the twentieth century, it was found that ***atoms have a central nucleus which is positive, surrounded by orbiting electrons***, as illustrated in *figure 28.1*. Though atoms, molecules and their particles are extremely small and invisible, yet experiments have been devised to discover their magnitude and their behaviour under various conditions.

> The diameter of the nucleus is typically 10^{-15} m; the diameter of the atom is of the order of 10^{-10} m. Therefore, the diameter of the atom is about one hundred thousand (100 000) times larger than the diameter of the nucleus. The volume of the particles (electrons, protons and neutrons) in the atom is about 10^{-12} of the volume of the atom. Consequently, most of the volume of atoms consists of empty space. Hence matter is mostly empty space!

Indeed, there is quite a resemblance between the atom and the solar system. If we consider the Sun to be the nucleus, electrons behave like its planets such as Earth. Electrons rotate around the nucleus as the Earth rotates around the Sun. Each electron spins about its axis as the Earth does. Most of the space between the various planets is vacuum; the atom is mostly empty space.

The effects of static electricity and **current electricity,** ***which is due to charges in motion***, are due to the same basic mechanism: the force of attraction and repulsion between electric charges.

Experiments lead to the following conclusion. **Like charges repel while unlike charges attract each other**.

28.2 Coulomb's Law

Coulomb investigated how the force between "point" (small) charges varies with their separation as well as with their magnitude. In one set of experiments, the magnitude of two charges was kept constant while their separation was varied. In another investigation, Coulomb kept the separation between the charges constant while their magnitude was varied. He arrived at the following conclusion known as **Coulomb's Law**.

The force between two point charges is directly proportional to the product of the charges and inversely proportional to the square of their distance apart.

Therefore, for a given separation, the magnitude of the force of attraction or repulsion between two point charges increases with the magnitude of the charges. As an illustration, suppose that two charges are placed a certain distance apart. Let the force between them be F. If the magnitude of each charge is doubled, then the force between the charges becomes $4F$.

Moreover, for any two given charges, the force between them is inversely proportional to the square of their separation. Thus, if their separation is doubled, the new force between the charges is 1/4 of the original force.

Charges are measured in coulombs (C). In practice, a coulomb is a very large quantity of charge; it is equivalent to the charge on 6×10^{18} electrons! Therefore, fractions of the coulomb are generally used.

1 microcoulomb (1 μC) = 10^{-6} C;
1 nanocoulomb (1 nC) = 10^{-9} C.

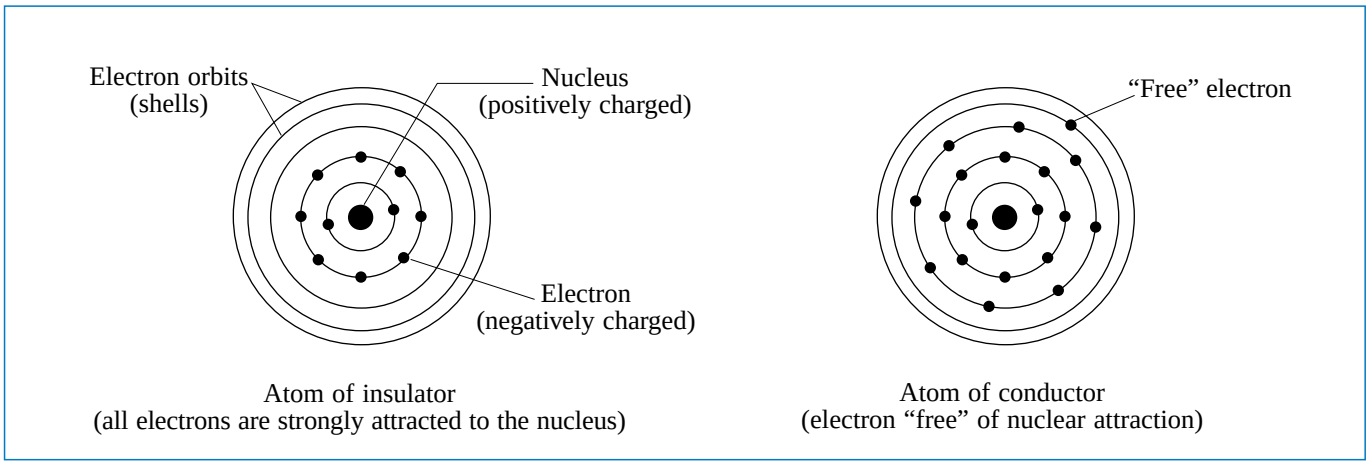

Figure 28.1 Electrons in conductors and insulators

The force between charges is also dependent on the medium between the charges. For instance, the force between two point charges in air is reduced to approximately 1/80 of its initial value if the changes are placed the same distance apart in water.

28.3 Electrical Conductors and Insulators

Certain substances such as metals, water and the human body allow electricity to flow through them with ease; these substances are *conductors* of electricity. Other materials such as wood, glass, rubber and perspex do not conduct electricity; they are electrical *insulators*.

The atoms of electrical conductors have one or more outer electrons that are relatively free from the attraction of their nuclei. Therefore, they can move with relative ease through the body of their materials when subjected to certain conditions. For instance, when a battery is connected between two points on a conductor, "free" electrons *drift* through the conductor. See *figure 28.1*.

All electrons in the atoms of electrical insulators are firmly attracted to the nuclei of their atoms. Hence, electrons are not free to move through an insulator.

28.4 Charging by Friction

Electrons can be transferred from one body to another by rubbing. When this shift of electrons takes place, the two bodies are *charged by friction*. The nuclear positive charge is tightly bound inside the nucleus and does not move during the charging process. The charge acquired is either positive or negative. All solids can be charged by rubbing but conductors have to be insulated. We consider the following as typical.

Polythene rubbed with wool becomes negatively charged while cellulose acetate or perspex rubbed with wool becomes positively charged.

The charge on the rubbing material is equal and opposite to the charge on the body rubbed. When conductors gain or lose electrons, the charge becomes distributed over the surface of the body. In insulators, the charge is confined to the region where it was produced. The forces of repulsion and attraction between charges in conductors are sufficiently large to cause free electrons to drift. An insulator does not contain free electrons. For instance, while insulators can be held in dry hands during the charging process, conductors have to be insulated since charges leak through the human body.

28.5 Electrostatic Induction

If a charged body R is brought near an insulated conductor X, charges on the conductor are redistributed as shown in *figure 28.2*. This phenomenon is known as *electrostatic induction*. The conductors are not charged since they have neither gained nor lost charge; only displacement of electrons has occurred. Protons are at the centre of the atom and are not displaced by induction.

Note that in this and other related experiments, *the charged body* R *may be an insulator or a conductor*.

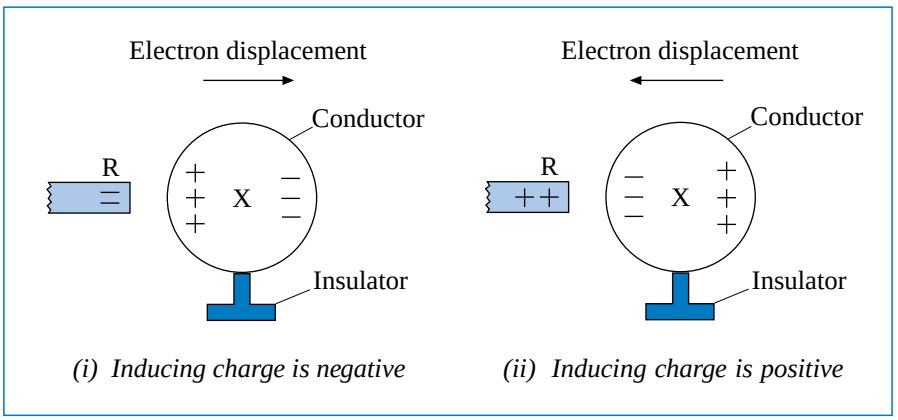

Figure 28.2 Electrostatic induction

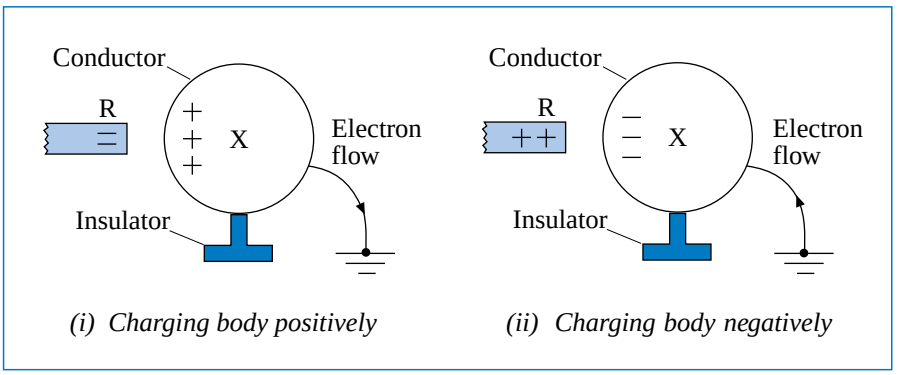

(i) Charging body positively *(ii) Charging body negatively*

Figure 28.3 Charging a conductor by electrostatic induction

28.6 Charging a Conductor by Electrostatic Induction

Electrostatic induction is an effective way of charging conductors. Suppose that the insulated conductor X in *figure 28.3* is to be charged. A charged body R is brought close to X. The conductor is then earthed, for instance by touching it with a finger, or by connecting it to a metal water pipe. In *(i)*, some electrons flow from the body to earth while in *(ii)* some electrons travel from earth to the conductor. The earth connection is removed. R is then taken away. The conductor is left with a net charge. If R is removed whilst the body is still earthed, X will be found to carry no charge.

It has already been pointed out that charge disperses over the *surface* of a charged conductor. If the conductor has a regular shape, such as a sphere, the charge is evenly distributed over its surface. If not, charge is distributed *unevenly* over the surface of the conductor; see section 28.11. Note that, in each case, the charge on the conductor is opposite to that on the charging body.

28.7 Leaf Electroscope

A leaf electroscope consists of a metal disc, A, mounted on a conducting rod B as illustrated in *figure 28.4*. Both A and B are typically made of brass or copper. A piece of a thin gold or aluminium foil C is attached to the central conducting rod. The apparatus is mounted in a box D. The front and back of the box are made of transparent material, such as glass, so that the movement of the leaf can be observed. The rest of the box is made of metal. The rod B is insulated from the metal section of the box by means of the insulating plug E. The socket F is available if it is required to earth the metal box. The apparatus is often referred to as "gold leaf" electroscope.

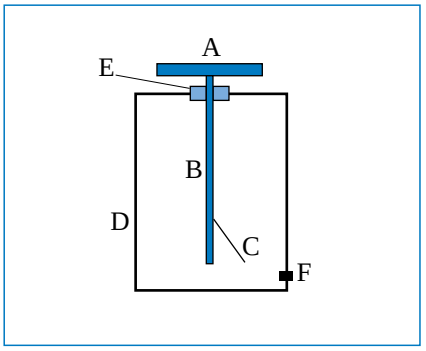

Figure 28.4 The leaf electroscope

28.8 Charging a Leaf Electroscope

(a) **By contact** The disc of the electroscope is gently rubbed with a charged body. Some charges are transferred from one body to the other. The passage of charge is quicker if the charging body is an insulated conductor. Whatever the nature of the charging body, the electroscope acquires a charge of the *same* sign as that of the charging body.

(b) **By induction** *Figure 28.5* shows the steps used in charging an electroscope by induction. When the positively charged rod R is placed close to the cap of the electroscope, electrostatic induction occurs; see *figure 28.5(i)*. When the cap is earthed as in *(ii)*, electrons drift from earth to the electroscope to neutralise the excess positive charge on the lower part of the central rod and leaf of the instrument. The negative charges on the cap are held in position by the attraction from the positive charge on R. In *(iii)*, the earth connection is broken. There is still no divergence of the leaf because the charges on the cap are still attracted by

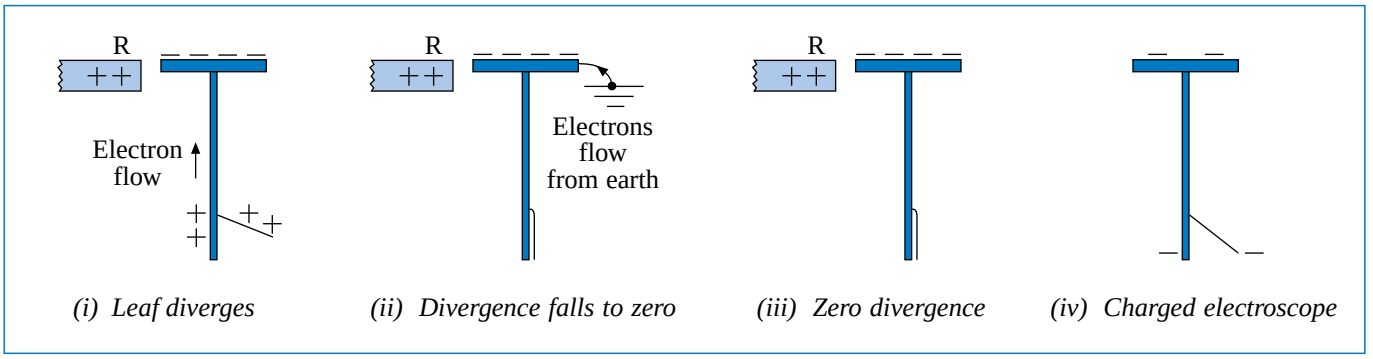

(i) Leaf diverges *(ii) Divergence falls to zero* *(iii) Zero divergence* *(iv) Charged electroscope*

Figure 28.5 Charging electroscope by induction

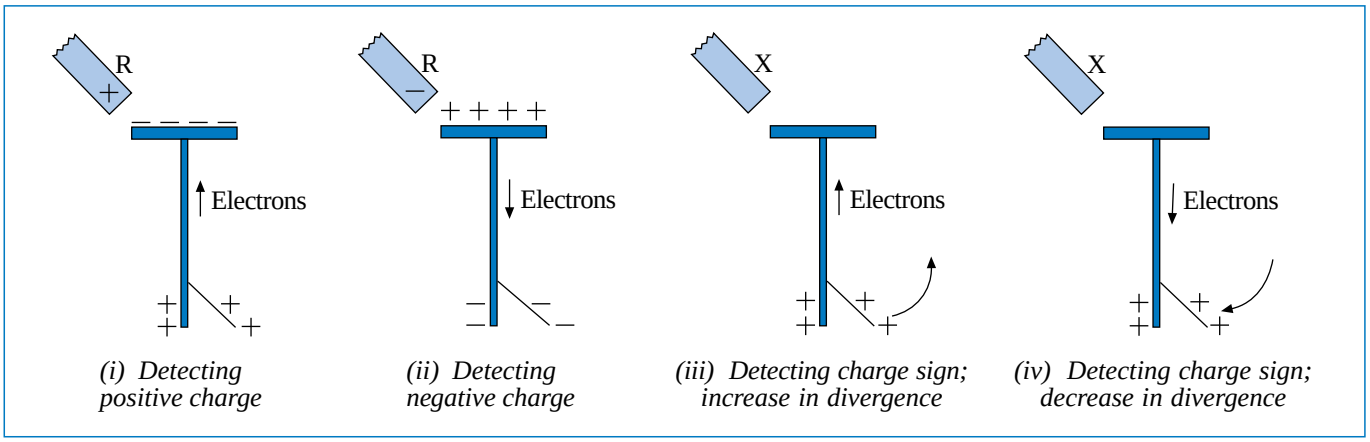

Figure 28.6 Detecting charge and sign of charge

the positive charge on R. When the charging body is removed, the charge disperses and the leaf diverges as in *(iv)*.

It is left as an exercise for the student to draw diagrams similar to those in *figure 28.5* to explain the steps that have to be taken to charge the electroscope with a negatively charged rod.

It must be remembered that whenever a body is charged by induction, the sign of the charge on the body is always *opposite* to that on the charging body. A negatively charged rod yields a positively charged electroscope while a positive rod charges the instrument negatively.

28.9 Some uses of Leaf Electroscope

(a) **Detection of charge** Suppose that the positively-charged body R in *figure 28.6(i)* is brought near the cap of an uncharged electroscope. Some electrons on the leaf and rod are attracted to the cap by the positive charge on R. A state of equilibrium is soon reached and further flow of electrons towards the cap is stopped by the repulsion from the negative charge accumulated on the cap. The lower part of the central rod and the leaf have an excess of positive charge. The force of repulsion between them is sufficient to repel the very light leaf and hence it diverges. If R is negative, the movement of charge is that indicated in *figure 28.6(ii)*. The leaf divergence may be used to check whether a body is charged. If it is, the leaf of the uncharged electroscope diverges when the body is brought near the cap. If the body under test is not charged there is no divergence of the leaf.

(b) **To determine the sign of the charge on a body** To determine the sign of the charge on the body X in *figure 28.6(iii)*, the body is brought close to the cap of the charged electroscope. Suppose that the electroscope is positively charged. If the charge on X is also positive, the divergence of the leaf increases. Some electrons move towards the cap due to the attraction from X making the leaf more positive. If the charge on X is negative, the divergence of the leaf decreases. Some electrons are repelled from the cap by the negative charge on X. The divergence of the leaf decreases as indicated in *figure 28.6(iv)*. The test may be repeated using a negatively charged electroscope. A negatively charged body brought near the cap of the electroscope increases the divergence. A positively charged body brought near the cap decreases the divergence of the negatively charged electroscope.

Note that if the sign of the charge on the body under test is different from that on the charge on the electroscope, the divergence of the leaf decreases. If the sign of the charge on the body under test is the same as the charge on the electroscope, the leaf divergence increases.

(c) **Testing for electrical conductivity** If the cap of a charged electroscope is touched with a strip of dry paper or any other uncharged insulator, the leaf collapses only gradually. If the cap of the electroscope is touched with an uncharged metal, the leaf collapses immediately. Therefore, a rough comparison of the conducting powers of substances may be made by observing the rate of collapse of the leaf as each is brought in turn in contact with the electroscope cap.

28.10 Charging by Induction using Two Conductors in Contact

Two conductors, such as two identical spheres on insulating supports, are placed in contact as shown in *figure 28.7(i)*. To ensure that the spheres A and B carry no charge they are initially earthed. A negatively charged body R is placed near A as shown. Electrostatic induction occurs and some electrons in A move to B as indicated in the diagram.

With R still in position, sphere B is displaced some distance away from A as indicated in *(ii)*. The negative charge displaced from A *cannot* now return to it. The sphere A has an excess of positive charge whilst B has an excess of negative charge. Hence both spheres

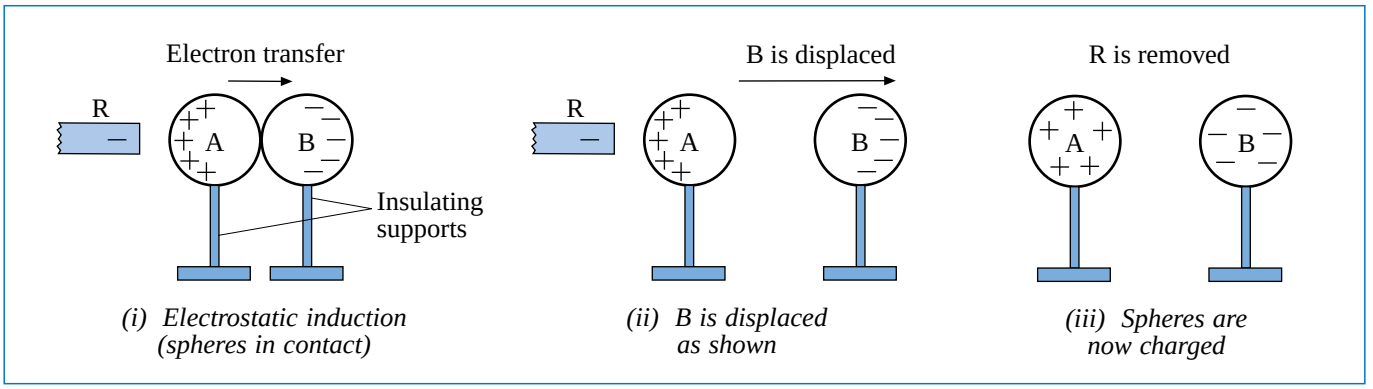

Figure 28.7 Charging by induction using two conductors

are charged. When R is removed away from the spheres, the charges on the two conductors spread evenly over their surfaces as illustrated in *(iii)*. In both instances, electrons travel along the conductor to provide an even distribution of charges. If A is now brought close to a *positively* charged electroscope, the leaf divergence increases. There is an increase in divergence of the leaf of a *negatively* charged electroscope when B is brought close to its cap. If each sphere is brought in turn close to an uncharged electroscope, the leaf divergence is the *same* in each case. This shows that the charges on A and B are equal in magnitude.

28.11 Experiments to study the Distribution of Charge on Conductors

Figure 28.8(i) shows a **proof-plane**. It consists of a metal disc P on an insulating handle Q. The shape of P is chosen to fit the surface with which it is brought in contact. R in *figure 28.8(ii)* is a charged conducting sphere on an insulating support S.

When P is placed in contact with a charged conductor, it acquires some charge. Suppose that P is brought in contact with R. The proof-plane is then held near the cap of an uncharged electroscope (not shown). The leaf diverges. The proof-plane is discharged and the experiment is repeated for other parts of the surface of the sphere. It is found that the leaf divergence is constant; hence the charge is distributed *evenly* over the surface of the sphere.

The charged conductor in *figure 28.8(iii)* has a pointed part E, a flat region G, curved parts A, B, and a hollow section F.

The distribution of charge on the conductor may be examined by placing the proof-plane, in turn, on various parts of the conductor. In each case, the proof-plane is then brought close to the cap of an uncharged electroscope. The leaf does not diverge after the proof-plane has been in contact with the hollow part F. The leaf divergence is small for flat surfaces such as G. The divergence increases for curved surfaces such as A and B. It will be observed that the divergence of the leaf is maximum after the proof-plane has been in contact with the pointed part E.

The charge per unit area of a surface of a charged conductor is called the **surface charge density**. Experiments described in this section lead to the following conclusions. *Surface charge density is uniform over the surface of a sphere; it is maximum at pointed edges, small on flat surfaces and zero on hollow parts*.

28.12 Action of Charged Pointed Conductors

The surface charge density at pointed conductors can be quite high; it may be sufficient to ionise air molecules. An **ion**

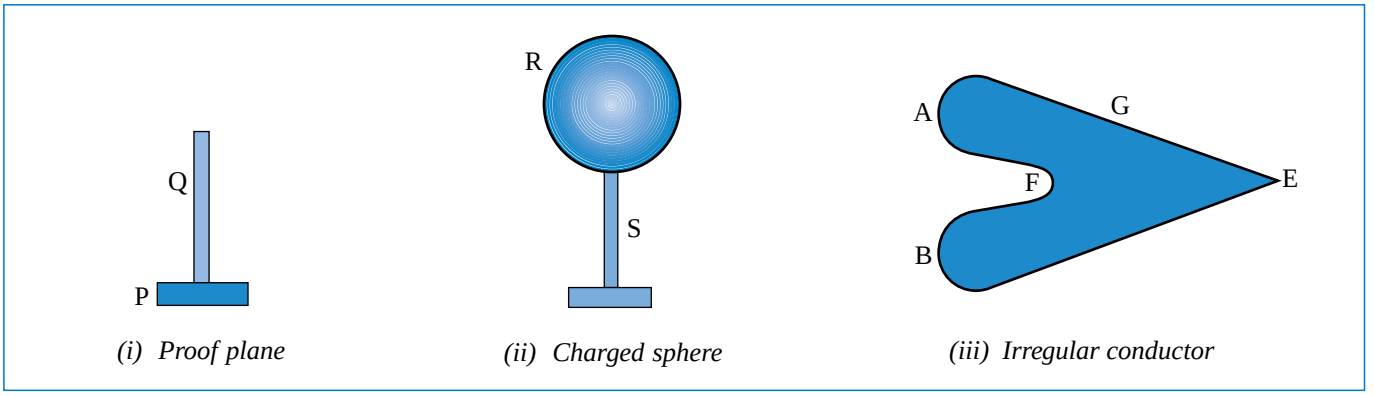

Figure 28.8 Testing the distribution of charge on conductors

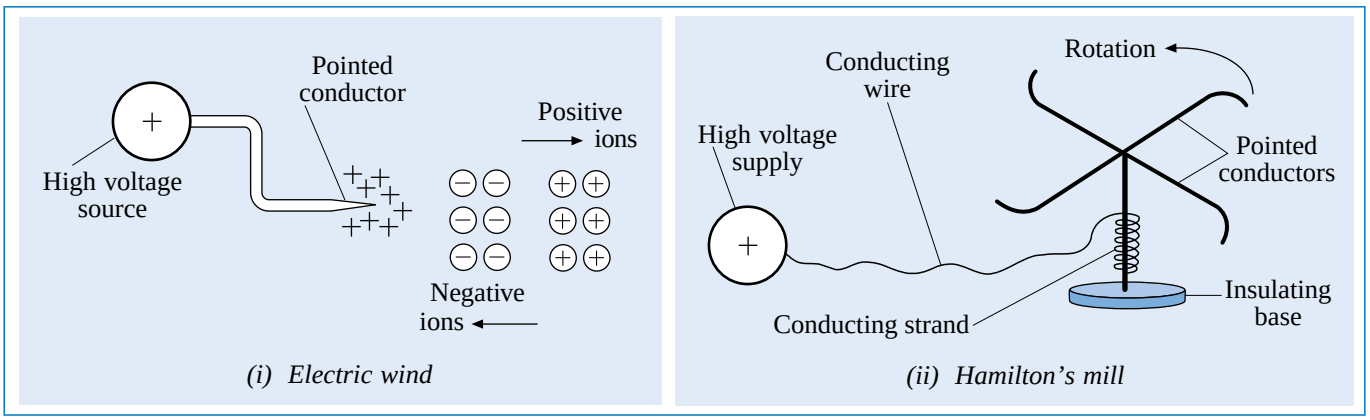

Figure 28.9 Demonstration of action at pointed conductors

is an atom (or molecule) which has gained or lost at least one electron. The outer electrons of air molecules break away either by attraction (if the pointed part of the charged conductor is positive) or by repulsion (if the accumulated charge on the pointed section of the conductor is negative). In either case, the affected air molecules become charged; the product consists of positive ions. Some electrons emitted during ionisation become attached to other air molecules to form negative ions. *Ionised air conducts electricity.*

The effect of highly charged pointed conductors may be demonstrated by various experiments. In *figure 28.9(i)*, a wire is connected to the positive terminal of a high voltage device. The movement of the ions creates what is called an *electric wind*. It may be demonstrated by bringing a candle flame (not shown) close to the pointed conductor. The flame is deflected by the draught which may be sufficiently strong to blow off the candle.

The direction of rotation of what is known as **Hamilton's mill** is shown in *figure 28.9(ii)*. The rotation of the "mill" is caused by ions produced in the surrounding air as a result of the large charge density at the pointed ends.

Benjamin Franklin (1706-1790), an American scientist and statesman who established the electrical nature of lightning, discovered the *lightning conductor* which was made public in 1753. Nowadays, a lightning conductor consists of a thick, long wire, typically made of copper, with sharply pointed conductors at the upper end and earthed at the lower end.

Lightning consists of a huge electric spark occurring between two charged clouds or a charged cloud and earth. Referring to *figure 28.10*, negative ions in the surrounding air are attracted by the intense charge density on the

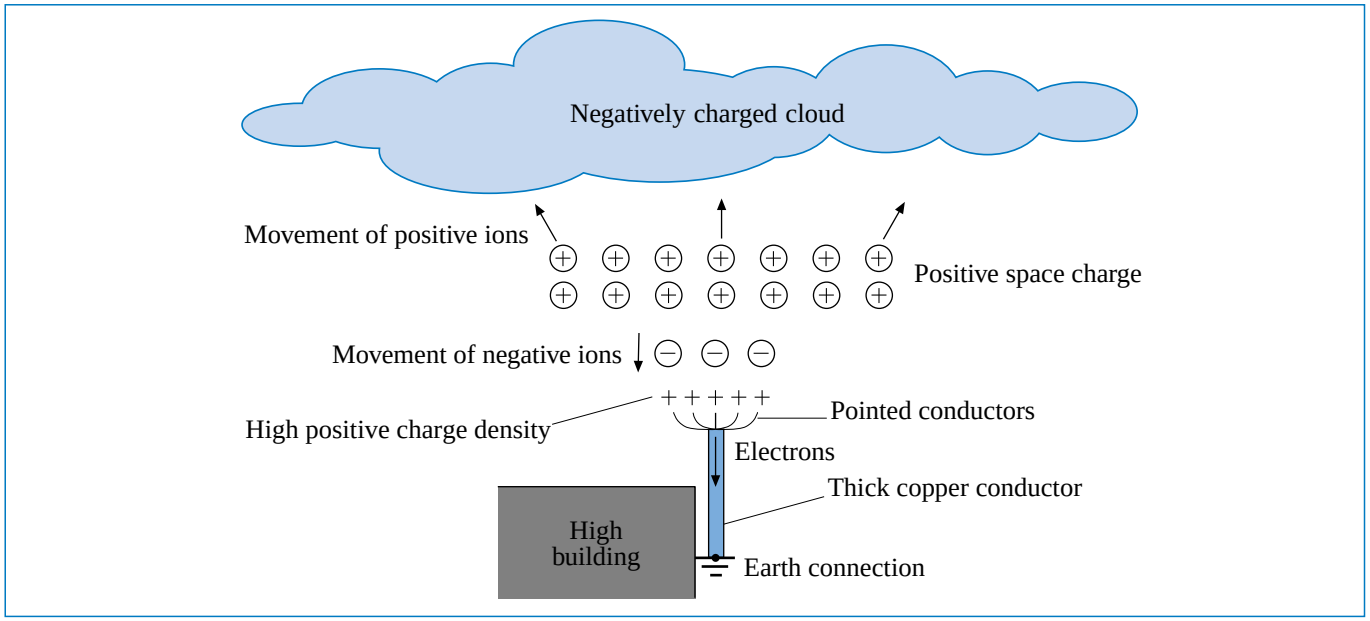

Figure 28.10 The lightning conductor

pointed conductors and are discharged by giving up electrons. Such electrons escape through the thick copper wire to earth. The high positive charge density on the pointed conductors repels positive ions upwards to form what is called a positive *space charge*. The space charge acts as an electric screen and reduces the powerful electric forces between a building, to which the lightning conductor is fixed, and the cloud. This state of affairs decreases the possibility that lightning strikes the building but if it does, the charge passes to earth through the thick copper conductor. The lightning conductor is particularly useful to protect buildings exposed to rough weather.

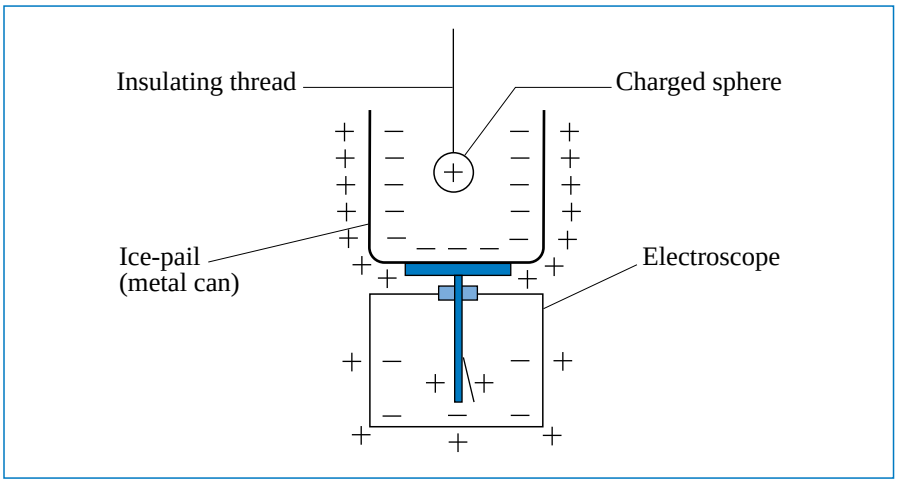

Figure 28.11 Faraday's ice-pail experiment

28.13 Faraday's Ice-pail Experiment

Faraday carried out a number of experiments using a conducting ice-pail (deep metal can) placed over the cap of an uncharged electroscope. When an insulated charged conductor, such as a metal sphere suspended from a silk thread, is lowered into the can *without touching* it, the electroscope leaf diverges due to electrostatic induction; see *figure 28.11*.

Negative charges are induced on the inner surface of the can. Since the ice-pail is uncharged, an equal and opposite charge is induced on the outer surface of the can (including the cap, stem and leaf of the electroscope). Electrostatic induction also occurs on the conducting parts of the electroscope case. When the charged sphere is well inside the can, it can be moved about without altering the divergence of the electroscope leaf. When the sphere is removed, the divergence falls to zero.

If, while inside the can, the sphere is moved to *touch* the can, the divergence of the leaf is unaltered even on

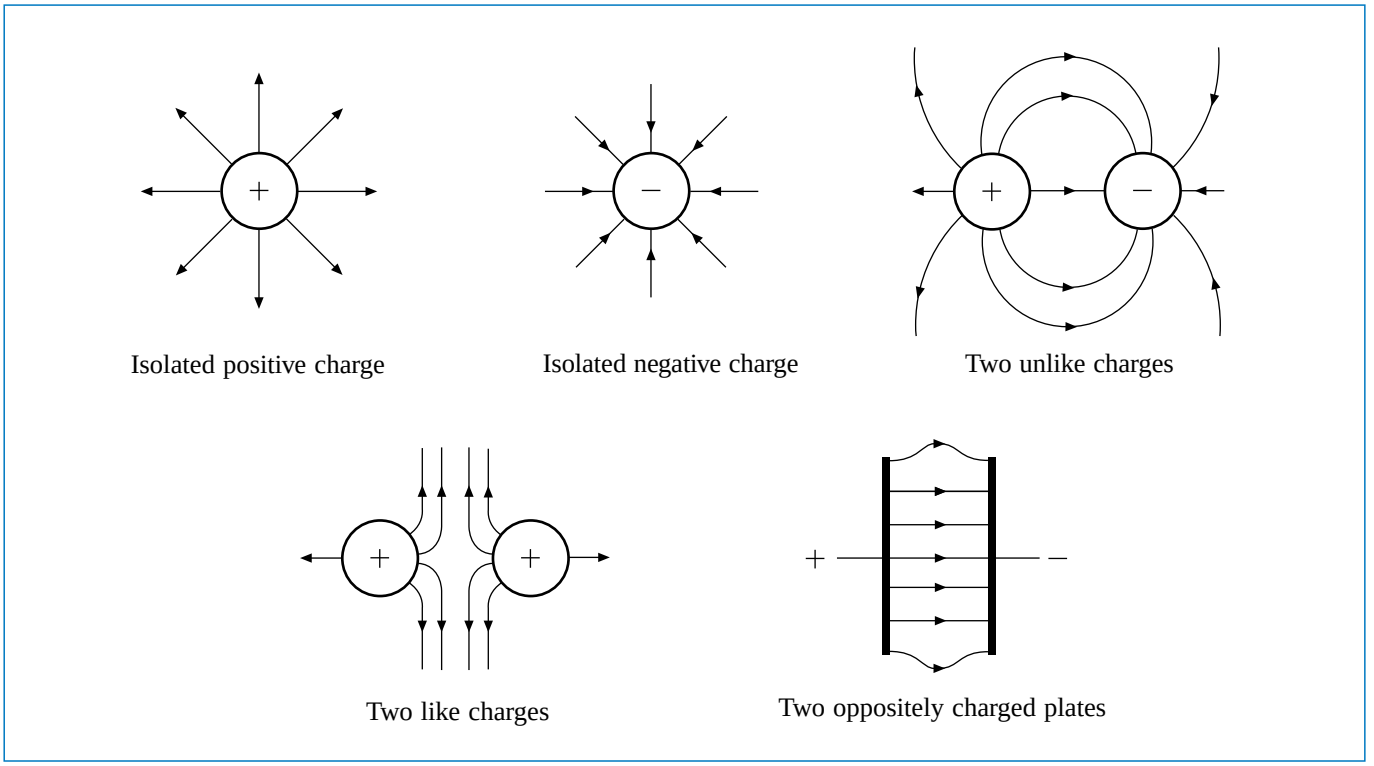

Figure 28.12 Common electric fields

removing the sphere. When tested, the sphere is found to have lost *all* its charge. The charge on the sphere has been permanently transferred to the outer surface of the can as well as the cap, stem and leaf of the electroscope.

The following deductions can be made from Faraday's experiment.

(a) *The induced and inducing charges are equal and opposite*. This conclusion follows from the fact that no residual charge, either positive or negative, is left on the conducting sphere after contact with the inner surface of the can.

(b) *A charged conductor can be discharged by contact with the inner surface of a hollow conductor*. This follows from our first deduction. A charged body lowered into the conducting can induces an equal and opposite charge on the inner surface of the can. When contact between the conducting sphere and can is made, the equal and opposite charges neutralise each other. Consequently, the sphere is discharged.

(c) *The **total** charge inside a hollow conducting can is always zero*. When a charged body is placed inside the can without touching it, the number of positive charges is equal to the number of negative charges. The *net* or total charge is then zero. If no charge is suspended inside the can, a proof-plane may be used to show that there is no charge inside the can even when it is charged. The charges reside on the outside of the can.

28.14 Electric Field; Electric Field Lines

The Earth has a gravitational field. This is the region where a gravitational force is experienced. A mass in the Earth's field is attracted by this planet. Similarly, a *charge at rest* has a region around it in which another charge or conductor experiences a force.

An **electric field** ***is a region where an electric force is experienced***. An electric field can be represented by **electric field lines** (or **lines of force**). An **electric field line** is defined as ***the path taken by a small positive point charge if free to move***. *Figure 28.12* shows some electric fields.