Sulfolane™ Process

Aromatics

Application

The Sulfolane process combines liquid-liquid extraction with extractive distillation to recover high purity aromatics from hydrocarbon mixtures, such as reformed petroleum naphtha (reformate), pyrolysis gasoline (pygas), or coke oven light oil (COLO). Contaminants that are the most difficult to eliminate in the extraction section are easiest to eliminate in the extractive distillation section and vice versa. This hybrid combination of techniques allows Sulfolane units to process feedstocks of much broader boiling range than would be possible by either technique alone. A single Sulfolane unit can be used for simultaneous recovery of high-purity C_6-C_9 aromatics, with individual aromatic components recovered downstream by simple fractionation.

Typically when just one or two carbon number aromatics are recovered, the Sulfolane unit can be built as an Extractive Distillation (ED) unit only and the extractor can be eliminated, thereby simplifying the design. (See ED Sulfolane Technical data sheet for more information)

Sulfolane Process

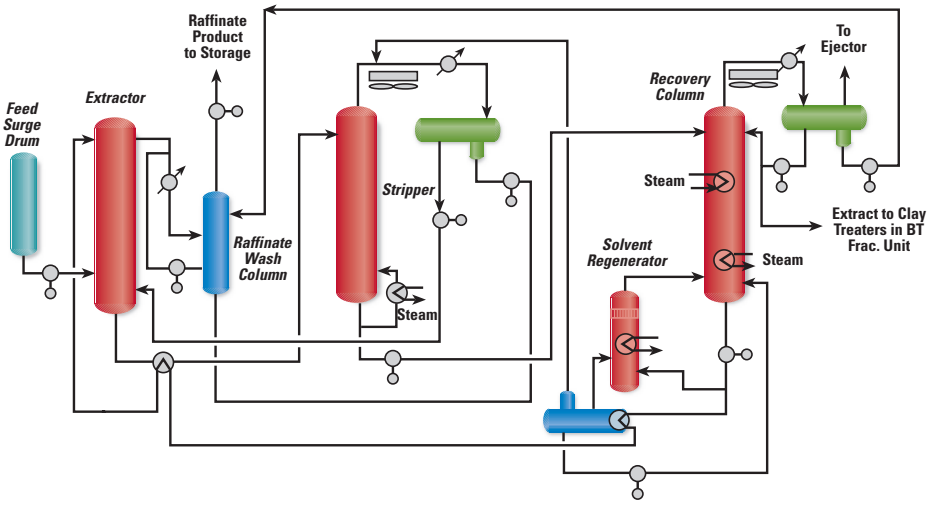

The Sulfolane process takes its name from the solvent used: tetrahydrothiophene 1, 1-dioxide, or "sulfolane." Sulfolane was developed as a solvent by Shell Oil Company in the early 1960s and is still the most efficient solvent available for the recovery of aromatics. Most extraction units can be made to operate at high purity and recovery by circulating more and more solvent. Because the sulfolane solvent exhibits higher selectivity and capacity for aromatics than any other commercial extraction solvent, Sulfolane units operate at the lowest available solvent-to-feed ratio for any given reformate feedstock. Therefore, for reformate applications, a Sulfolane unit is less expensive to build and operate than any other type of extraction unit.

A Sulfolane unit is usually incorporated within an aromatics complex to recover high-purity benzene and toluene products from reformate. In a modern, fully integrated UOP aromatics complex, the Sulfolane unit is located downstream of the reformate splitter column. The C_6-C_7 fraction from the overhead of the reformate splitter is fed to the Sulfolane unit. The aromatic extract from the Sulfolane unit is clay treated to remove trace olefins, and individual benzene and toluene products are recovered by simple fractionation. The raffinate from the Sulfolane unit is usually blended into the gasoline pool or used for cracker feedstock.

Benzene is usually recovered by extraction or extractive distillation in order to meet purity specifications for petrochemical applications. Toluene is extracted for direct use in petrochemical applications and is usually extracted before being fed to a dealkylation or disproportionation unit for production of additional benzene and xylenes. Modern CCR Platforming™ units operate at such high severity that the C_8^+ fraction of the reformate does not contain any significant amount of nonaromatic impurities and may be sent directly to the xylenes recovery section of the plant without extraction. However, the C_8^+ fraction of pygas and COLO streams contains significant amounts of nonaromatics impurities and, therefore, must be extracted before either being recovered as mixed xylenes or sent to xylene recovery.

Process description

Fresh feed enters the extractor and flows upward, countercurrent to a stream of lean solvent. As the feed flows through the extractor, aromatics are selectively dissolved in the solvent. A raffinate stream, very low in aromatics content, is withdrawn from the top of the extractor.

The rich solvent, loaded with aromatics, exits the bottom of the extractor and enters the stripper. The nonaromatics components having volatilities higher than that of benzene are completely separated from the solvent by extractive distillation and removed overhead along with a small quantity of aromatics. This overhead stream is recycled to the extractor where the light nonaromatics displace the heavy nonaromatics from the solvent phase leaving the bottom of the extractor.

The bottoms stream from the stripper, substantially free of nonaromatic impurities, is sent to the recovery column, where the aromatic product is separated from the solvent. Because of the large difference in boiling point between the sulfolane solvent and the heaviest aromatic component, this separation is accomplished easily, with minimal energy input. To minimize solvent temperatures, the recovery column is operated under vacuum. Lean solvent from the bottom of the recovery column is returned to the extractor. The extract is recovered overhead and sent on to distillation columns downstream for recovery of the individual benzene and toluene products.

The raffinate stream exits the top of the extractor and is directed to the raffinate wash column. In the wash column, the raffinate is contacted with water to remove dissolved solvent. The solvent-rich water is vaporized in the water stripper by exchange with hot circulating solvent and then used as stripping steam in the recovery column. Accumulated solvent from the bottom of the water stripper is pumped back to the recovery column. The raffinate product exits the top of the raffinate wash column. The amount of Sulfolane solvent retained in the raffinate is negligible.

Under normal operating conditions, the Sulfolane solvent undergoes only minor oxidative degradation. A small solvent regenerator is included in the design of the unit as a safeguard against the possibility of air leaking into the unit. During normal operation, a small slip-stream of circulating solvent is directed to the solvent regenerator for removal of oxidized solvent.

The extract product from a Sulfolane unit may contain trace amounts of olefins and other impurities which would adversely affect the acid wash color tests of the final benzene and toluene products. To eliminate these trace impurities, the extract is clay treated prior to fractionation. Clay treating is done at very mild conditions and clay consumption is minimal.

The treated extract is directed to the aromatics fractionation section where high-purity benzene, toluene, and sometimes mixed xylenes are recovered. The design of the aromatics fractionation section varies depending on the particular processing requirements of the customer.

Precess performance

The performance of the Sulfolane process has been well demonstrated in more than 129 operating units. The recovery of benzene exceeds 99.9 wt-%, and recovery of toluene is typically 99.8 wt-%. The Sulfolane process is also efficient at recovery of heavier aromatics if necessary. Typical recovery of xylenes exceeds 98 wt-%, and 99 wt-% recovery has been demonstrated commercially with rich feedstocks.

Sulfolane units routinely produce a benzene product with a 5.5°C solidification point or better, and many commercial units produce benzene containing less than 100 ppm nonaromatic impurities. The toluene and C_8 aromatics products from a Sulfolane unit are also of extremely high purity, easily exceeding nitration grade specifications. In fact, the ultimate purity of all of the aromatic products is usually more dependent on the design and proper operation of the downstream fractionation section than on the extraction efficiency of the Sulfolane unit itself.

The purity and recovery performance of an aromatics extraction unit is largely a function of energy consumption. In general, higher solvent circulation rates result in better performance, but at the expense of higher energy consumption. The Sulfolane process demonstrates the lowest energy consumption of any commercial aromatics extraction technology. A typical Sulfolane unit consumes 275-300 kcal of energy per kilogram of extract produced, even when operating at 99.99 wt-% benzene purity and 99.95 wt-% recovery. Sulfolane units are also designed to efficiently recover solvent for recycle within the unit. Expected solution losses of Sulfolane solvent are less than 5 ppm of the fresh feed rate to the unit.

Features and benefits

- **High Purity Benzene** - The benzene produced in a Sulfolane unit (with downstream benzene and toluene fractionation) is typically 99.9 wt-% purity ASTM “Refined Benzene-545”. Alternatively, the more stringent ASTM “Benzene for Cyclohexane Feedstock” grade may be produced.

- **High Purity Toluene** - The toluene produced is at least TDI grade with less than 1000 wt-ppm non-aromatics.
- **High Recoveries** - The expected recovery of benzene and toluene is greater than 99.5% of these aromatic components present in the fresh feed. The make-up rate for sulfolane solvent is negligible.
- **Compatible Solvent** - Sulfolane is the most widely used solvent for aromatics extraction and a readily available commodity chemical. There are no co-solvents or proprietary additives. In addition, sulfolane does not contain nitrogen which can be harmful to catalysts in downstream process units.
- **Energy Efficient** - The Sulfolane process demonstrates low energy consumption.

Economics

Basis: 710 KMTA (17,000 BPSD) of BT cut feedstock from reformate with 66 wt-% aromatics

Estimated Erected Cost, US$ 18 MM
(2006 US Gulf coast basis, Inside battery limits only)

Estimated Utility Consumption

Electric power, kW	427
Medium pressure steam, MT/hr	26.8
Cooling water, m^3/h	292

Commercial experience

In 1962, Shell commercialized the first Sulfolane units in its refineries in England and Italy. The success of the Sulfolane process led to an agreement in 1965 whereby UOP became the exclusive licensor of the Sulfolane process. Many of the process improvements incorporated in modern Sulfolane units are based on design features and operating techniques developed by UOP. As of 2006, UOP has licensed a total of 149 Sulfolane units throughout the world.

For more information

Sulfolane technology services are available on request. For more information, contact your local UOP representative or our Des Plaines sales office:

e-mail: info@uop.com
fax: +1-847-391-2253
phone: +1-847-391-2000

Aromatics

UOP LLC
25 East Algonquin Road
Des Plaines, IL 60017-5017
U.S.A.
www.uop.com

© 2006 UOP LLC. All rights reserved.
The information in this document should not be construed as a representation for which UOP assumes legal responsibility, or an authorization or recommendation to practice a patented invention without a license.
UOP 4680-15 1106AR0Af

A Honeywell Company